07.1-015 Function exhaust gas recirculation

Model 201.126 is equipped with an electronically-controlled exhaust gas recirculation system as of model year 1986.

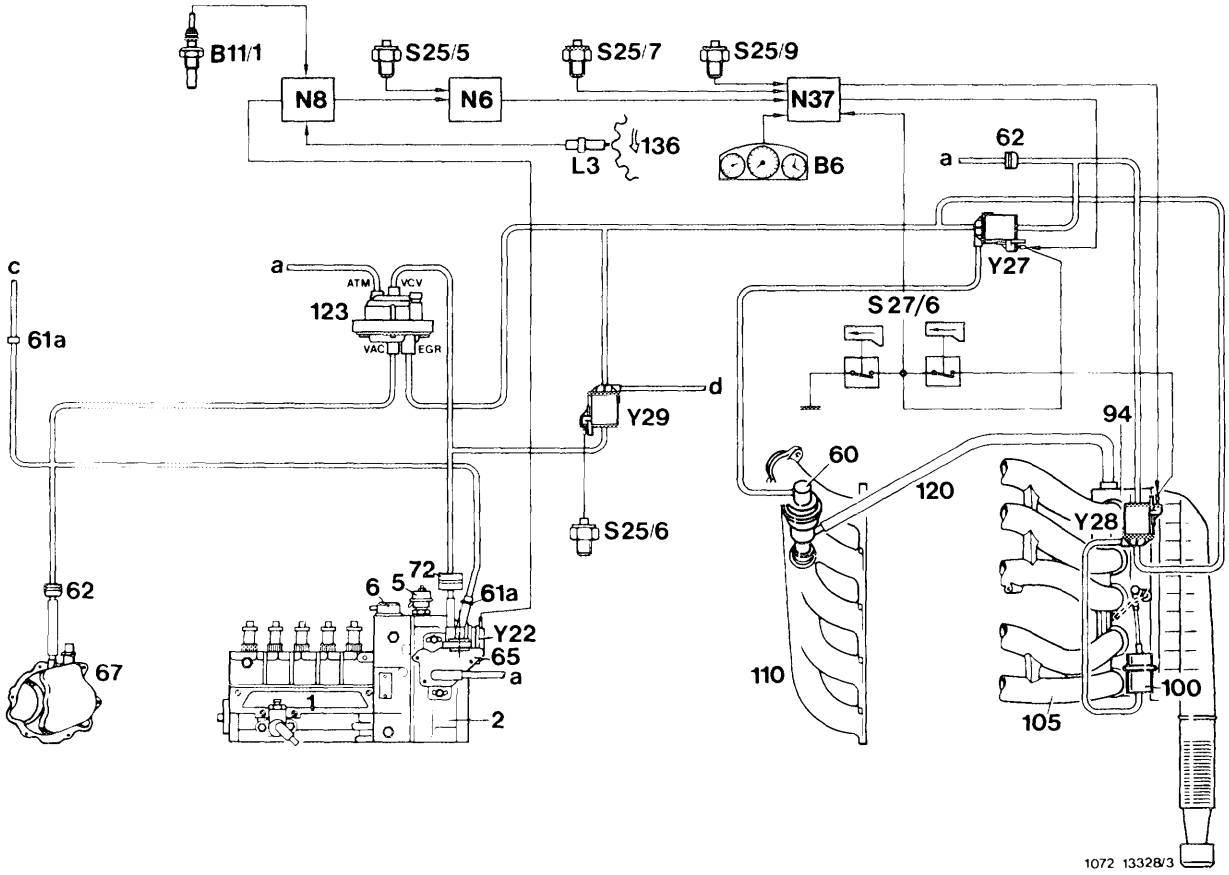

Engine 602 in model 201
as of model year 1986 1st version
Function diagram exhaust gas recirculation

1	Injection pump	B6	Hall-effect speed sensor
2	Governor	B11/1	Coolant temperature sensor
5	ADA unit	L3	Speed sensor starter ring gear
6	Vacuum unit (stop)	N6	Compressor shut-off control unit
61a	Choke, blue	N8	Idle speed control unit
61b	Choke, orange	N37	Control unit exhaust gas recirculation
62	Filter	S25/5	Temperature switch 105/115 °C
65	Vacuum control valve	S25/6	Temperature switch 50 °C
67	Vacuum pump	S25/7	Temperature switch 25 °C EGR
72	Damper	S25/9	Temperature switch 97 °C EGR
94	Air guide housing	S27/6	Microswitch compressor shut-off/EGR
100	Vacuum unit/vacuum control flap	Y22	Electromagnetic actuator ELR
105	Intake pipe	Y27	Switchover valve EGR
110	Exhaust manifold	Y28	Switchover valve vacuum control flap
120	Exhaust gas recirculation line	Y29	Switchover valve (automatic transmission)
136	Starter ring gear		

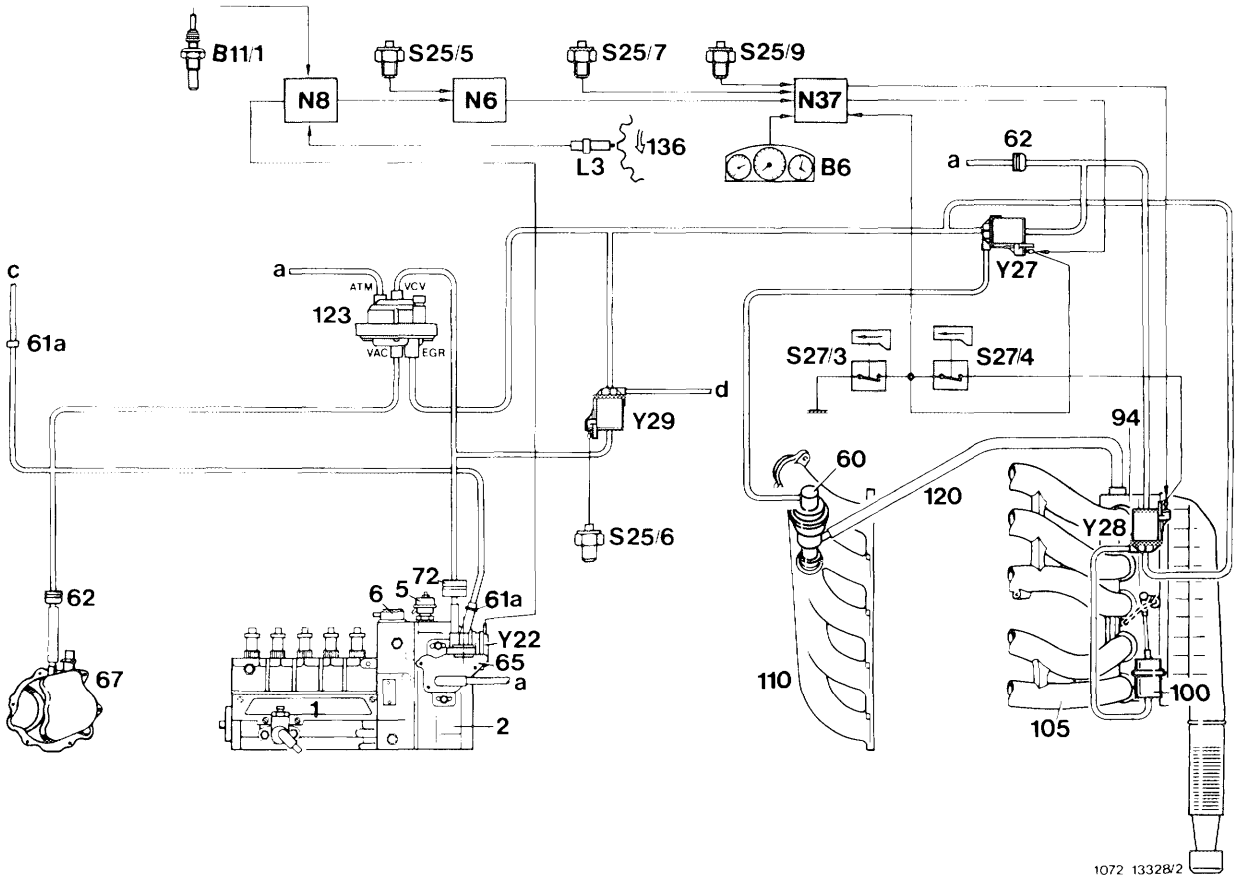

Engine 602 in model 201
as of model year 1986 2nd version
Function diagram exhaust gas recirculation

1	Injection pump	B6	Hall-effect speed sensor
2	Governor	B11/1	Coolant temperature sensor
5	ADA unit	L3	Speed sensor starter ring gear
6	Vacuum unit (stop)	N6	Compressor shut-off control unit
61a	Choke, blue	N8	Idle speed control unit
61b	Choke, orange	N37	Control unit exhaust gas recirculation
62	Filter	S25/5	Temperature switch 105/115 °C
65	Vacuum control valve	S25/6	Temperature switch 50 °C
67	Vacuum pump	S25/7	Temperature switch 25 °C EGR
72	Damper	S25/9	Temperature switch 97 °C EGR
94	Air guide housing	S27/6	Microswitch compressor shut-off/
100	Vacuum unit/vacuum control flap	Y22	Electromagnetic actuator ELR
105	Intake pipe	Y27	Switchover valve EGR
110	Exhaust manifold	Y28	Switchover valve vacuum control flap
120	Exhaust gas recirculation line	Y29	Switchover valve (automatic transmission)
136	Starter ring gear		

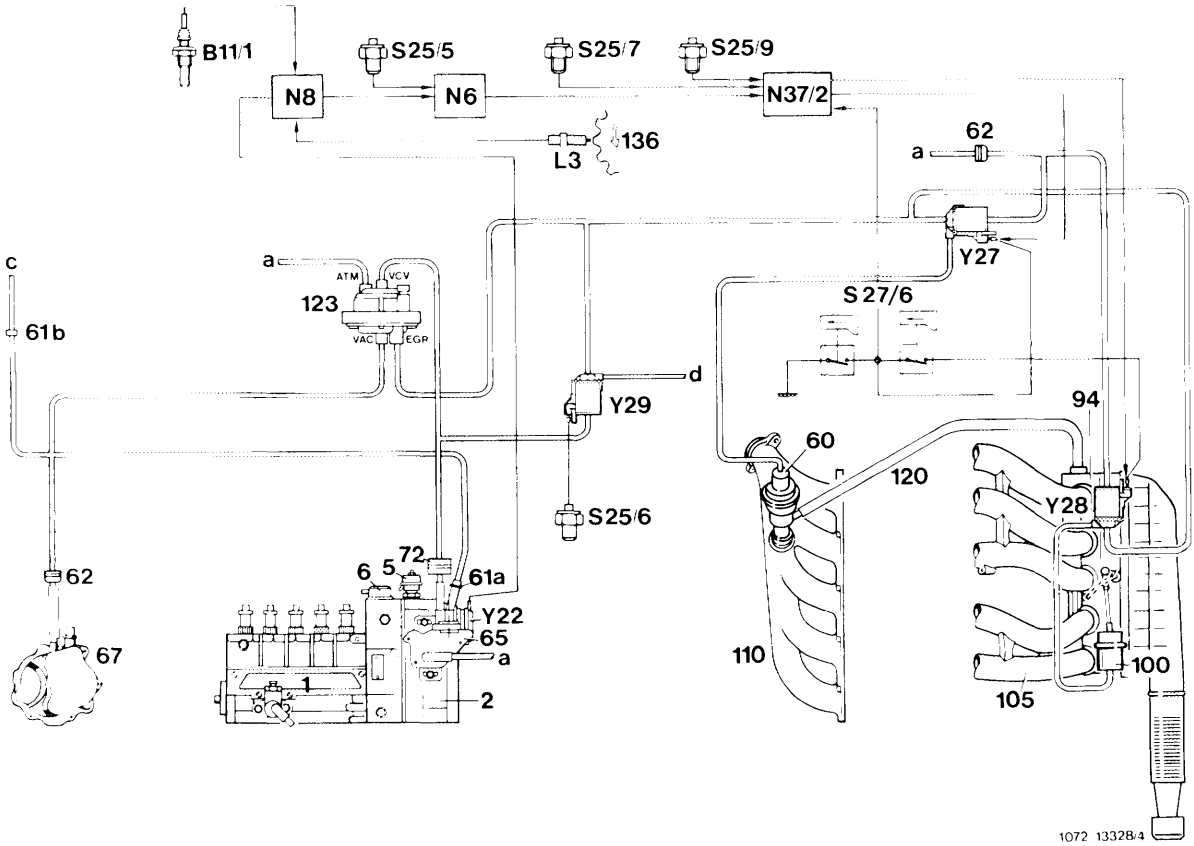

Engine 602 in model 201

model year 1989

Function diagram exhaust gas recirculation

1	Injection pump
2	Governor
5	ADA unit
6	Vacuum unit (stop)
60	Exhaust gas recirculation valve
61a	Choke, blue
61b	Choke
62	Filter
65	Vacuum control valve
67	Vacuum pump
72	Damper
94	Air guide housing
100	Vacuum unit/vacuum control flap
105	Intake pipe
110	Exhaust manifold
120	Exhaust gas recirculation line
123	Vacuum amplifier
136	Starter ring gear

B11/1	Coolant temperature sensor
B11/7	Climate temperature sensor
L3	Speed sensor starter ring gear
N6	Compressor shut-off control unit
N8	Idle speed control unit
N37/2	Control unit exhaust gas recirculation
S25/5	Temperature switch 105/115 °C
S25/6	Temperature switch 50 °C
S25/7	Temperature switch 25 °C EGR
S25/9	Temperature switch 97 °C EGR
S27/6	Microswitch compressor shut-off/
Y22	Electromagnetic actuator ELR
Y27	Switchover valve EGR
Y28	Switchover valve vacuum control flap
Y29	Switchover valve (automatic transmission)
a	Ventilation to vehicle interior
c	Remaining users
d	Vacuum unit automatic transmission
	Vacuum connections on vacuum amplifier
VAC	- Vacuum from vacuum pump
VCV	- To vacuum control valve
ATM	- Ventilation to vehicle interior
EGR	- Exhaust gas recirculation to exhaust gas recirculation valve

B. Components and function

Electrical components

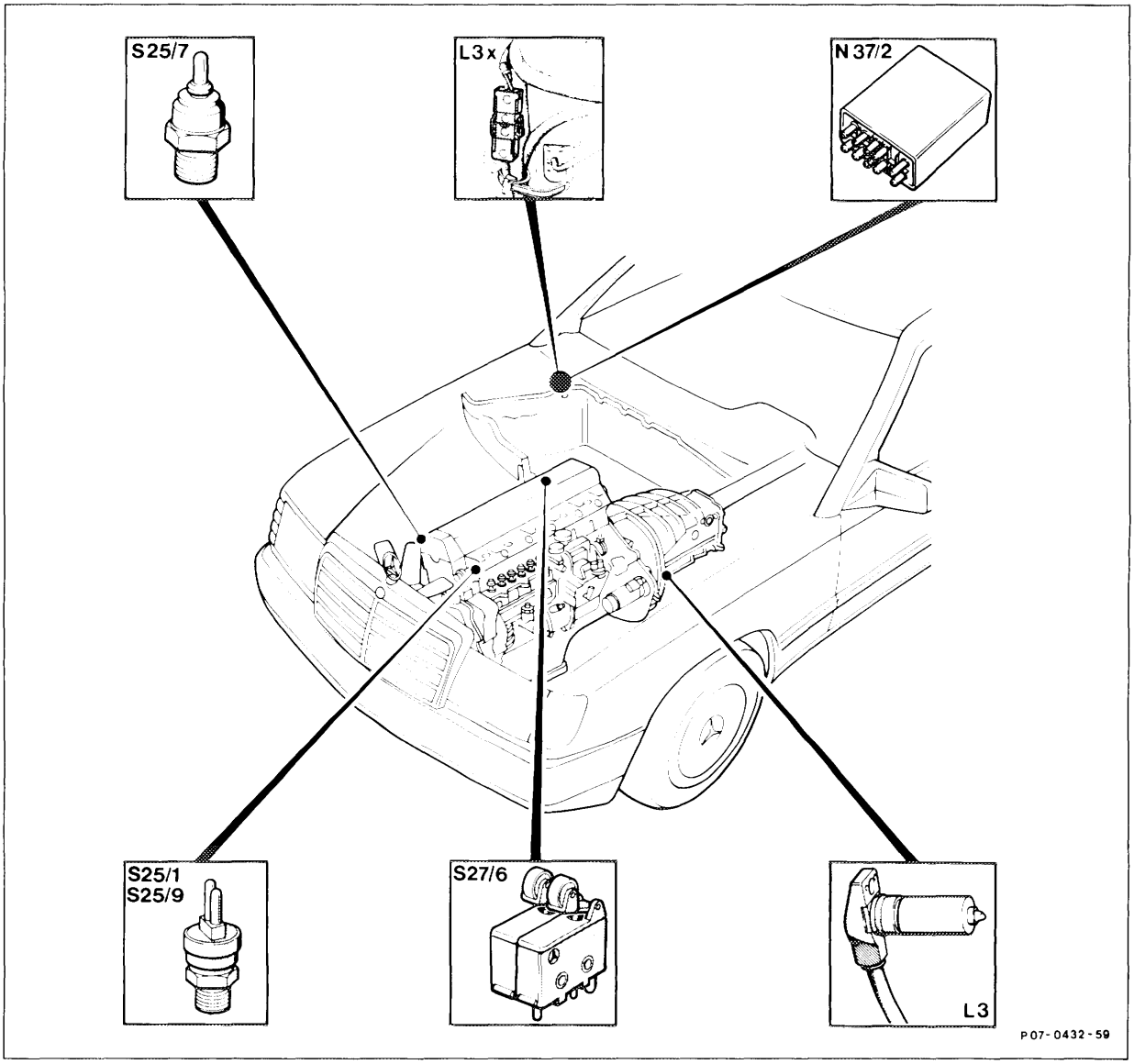

L3	Starter ring gear speed sensor	S25/1	Temperature switch 100 °C
L3x	Connector starter ring gear speed sensor	S25/7	Temperature switch 25 °C
N37/2	Control unit exhaust gas recirculation	S25/9	Temperature switch 97 °C
		S27/6	Microswitch compressor shut-off/EGR

Pneumatic components

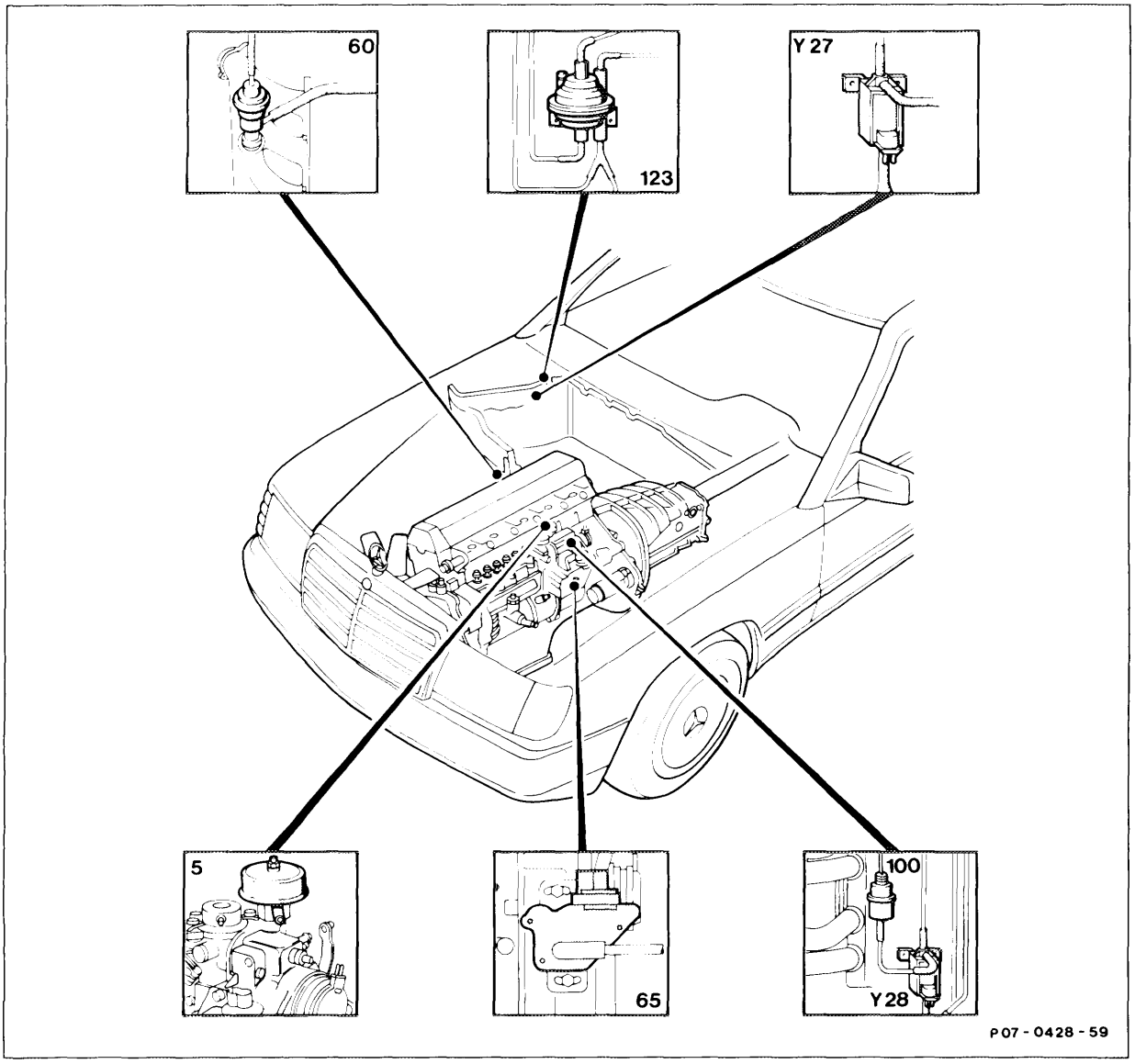

5	ADA unit	100	Vacuum unit vacuum control flap
60	EGR valve	123	Vacuum amplifier
65	Vacuum control valve	Y27	Switchover valve exhaust gas recirculation
		Y28	Switchover valve vacuum control flap

C. Overall function

Vacuum control valve (65)

The vacuum control valve is attached to the injection pump and connected to the control lever by means of a driver. Using available vacuum supply (central connection) it modulates decreasing pressure with increasing load.according to a.characteristic map.

The vacuum control valves have a different characteristic depending on the engine and transmission design. They are identified by differently colored sealing caps and must not be interchanged (see 07.1-170).

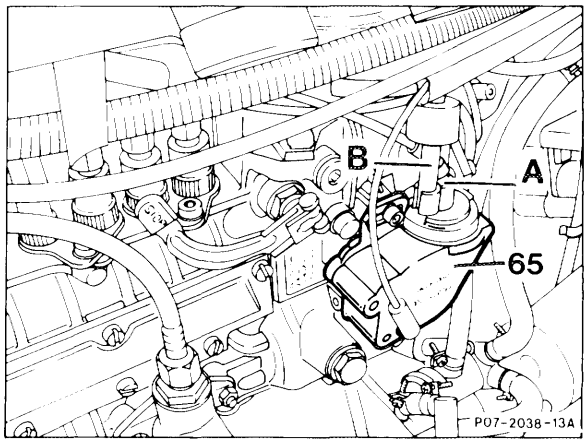

65 Vacuum control valve
A Control line
B Suction line

Vacuum amplifier (123)

(only with automatic transmission)
Attached to the unit wall.
The pressure modulated by the vacuum control valve is converted in the vacuum amplifier (123) for use in the exhaust gas recirculation system. By way of the switchover valves (Y27 and Y28) the exhaust gas recirculation valve and the vacuum control flap are activated.

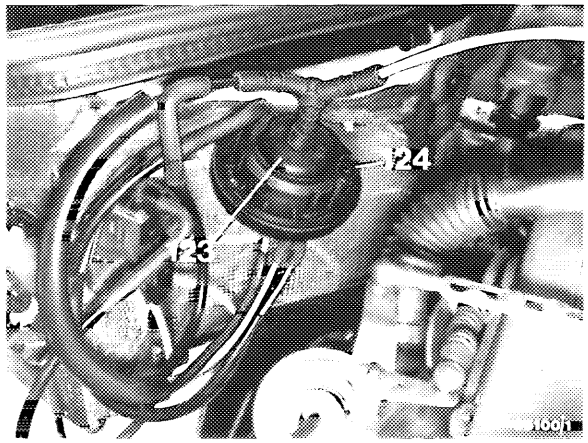

Air guide housing with vacuum control flap (99)

A pneumatically actuated vacuum control flap (99) is provided in the air guide housing in order to increase the vacuum in the intake pipe. During engine operation with exhaust gas recirculation the vacuum control flap closes off the fresh air duct.

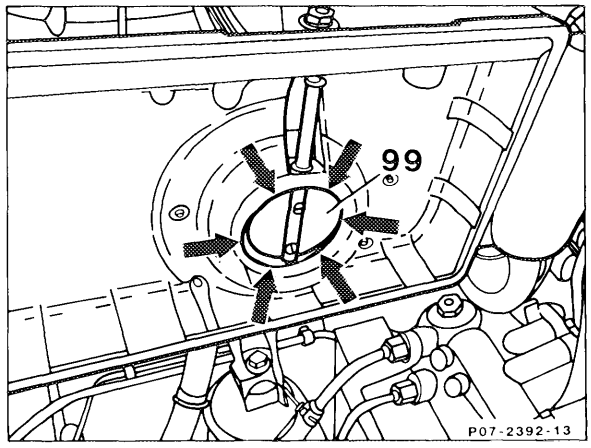

A minimum opening (arrow) between the vacuum control flap (99) and the air guide housing is maintained in a closed condition.

Note

The linkage on the vacuum unit for the vacuum control flap (99) may not be actuated manually.

Mechanical pressure control flap (99) with pneumatic control group, temperature-dependent > 40 °C

The exhaust gas recirculation is optimised by a mechanical actuation of the pressure control flap (99), thus improving the degree of the exhaust gas recirculation rate.

The pressure control flap (99) is always approximately 35° open in its initial setting (at idle speed).

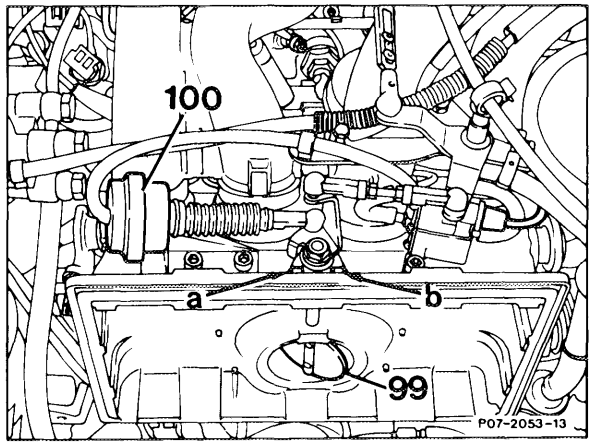

When the coolant temperatures are > 40 °C between 1000 ± 50/min and 2500 ± 50/min the pressure control flap is pneumatically closed via the thermovalve (180) and is opened again mechanically via the accelerator depending on the load condition.
The pressure control flap is open at full throttle.

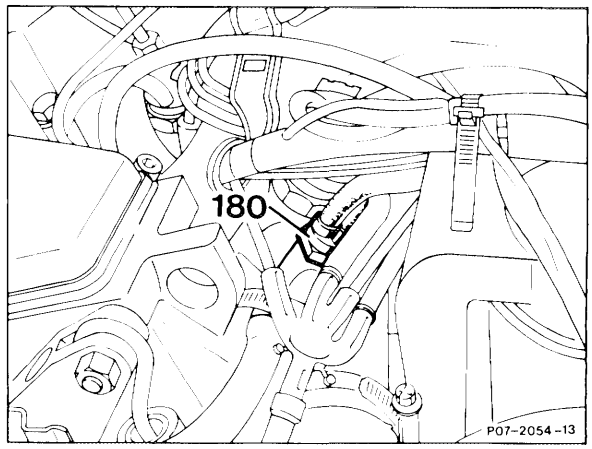

It became necessary to introduce a connecting rod (200) at the vacuum unit for the pressure control flap (due to the mechanical actuation of the pressure control valve (99)).

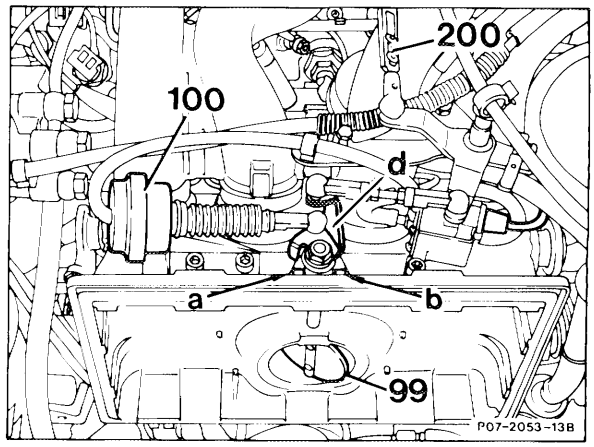

Exhaust gas recirculation valve
The exhaust gas recirculation valve is screwed into the side of the cylinder head. It is connected with the exhaust and the intake manifolds by way of the exhaust gas recirculation line.
The exhaust gas recirculation valve is activated by the modulated vacuum from the vacuum control valve and opens depending on the load condition.

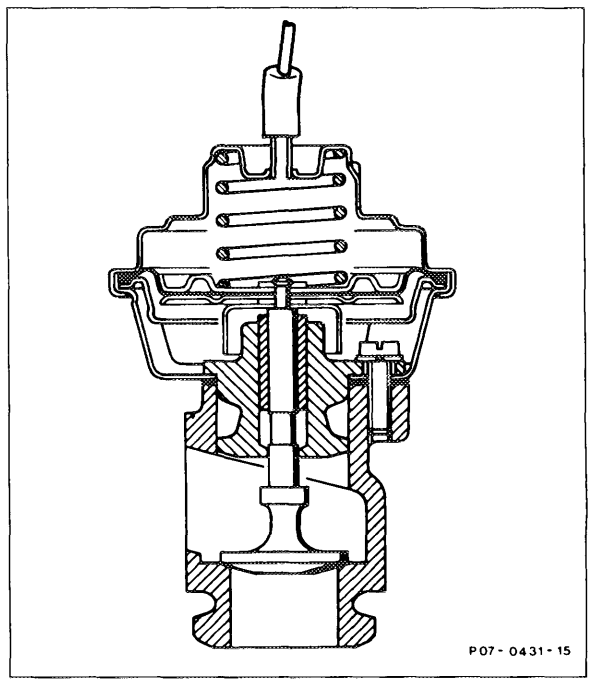

Control unit (N37 and N37/2)
This is installed behind the battery. Battery voltage is available on the control unit EGR (N37 or N37/2) after the ignition has been switched on. Minimum working voltage approx. 11 V.

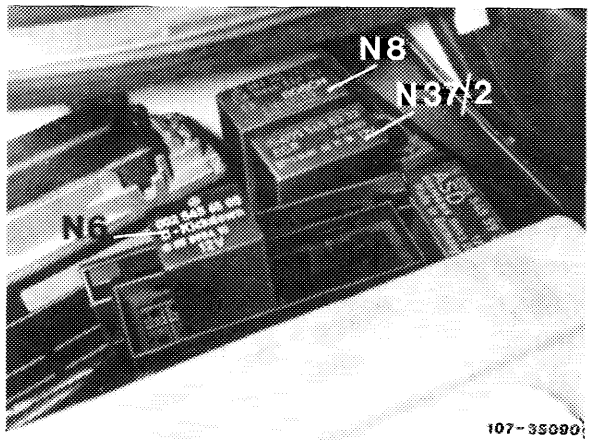

Electrical switchover valve (Y27)
This admits vacuum for the exhaust gas recirculation in certain operating conditions. The activation is by way of the control unit EGR (N37 or N37/2) as a function of coolant temperature and engine speed as well as speed and load-dependent on the microswitch (only with manual 5-speed transmission).

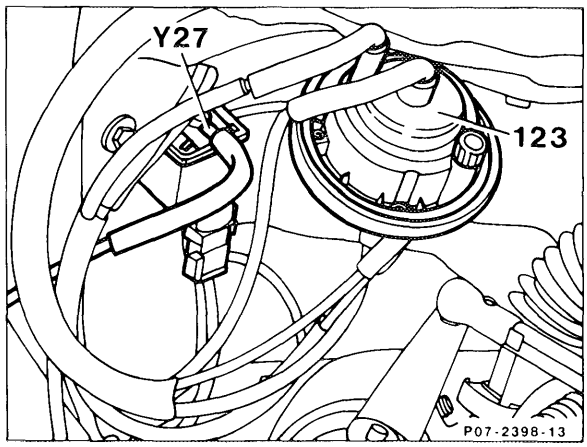

Electrical switchover valve (Y28)
This admits the vacuum for the vacuum control flap under certain operating conditions. The activation is by way of the control unit EGR (N37 or N37 2) as a function of coolant temperature and engine speed as well as dependent on speed and load via the microswitch (S27 4).

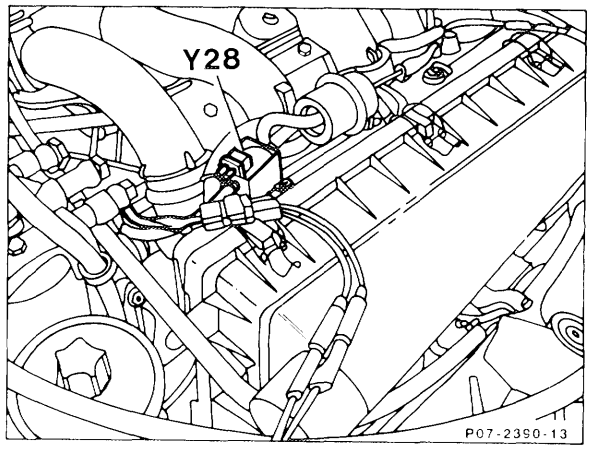

Microswitch (S27/6)
Microswitch I
Switches off the exhaust gas recirculation and the A C compressor before full load (A C compressor only if climate comfort control is operative).

Microswitch II
Switches off the vacuum control flap before reaching full load.

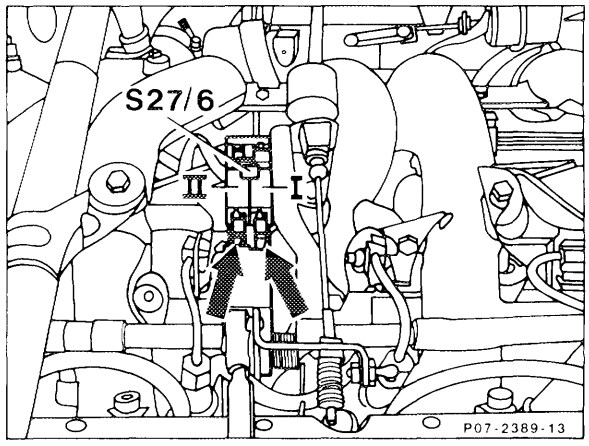

Coolant temperature switch 97° and 100 °C (S25/1, S25/4, S25/9)
For thermal protection of the engine the temperature switch switches off the exhaust gas recirculation via the control unit EGR (N37 or N37 2) from a coolant temperature of approx 100 °C.

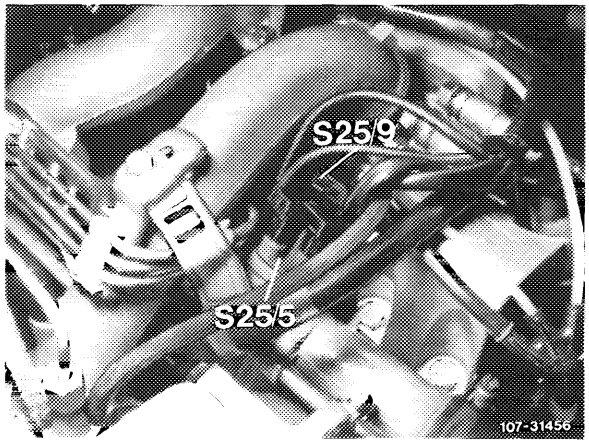

Starter ring gear speed sensor (L3)
This is attached to the flange of the transmission. The speed sensor (L3) consists of a magnetic core and a coil. It registers the engine speed, passing it on to the control unit EGR (N37 or. N37/2) in form of an A.C voltage.

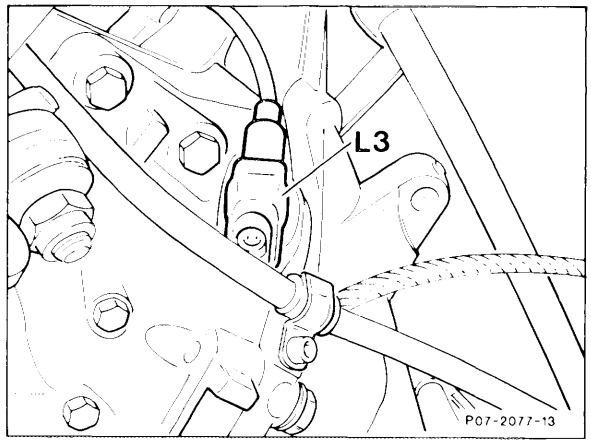

Hall-effect speed sensor (B6)
(only with manual transmission)
The vehicle speed is taken off the speedometer by the Hall-effect speed sensor (arrow). At a speed above 87 km/h the exhaust gas recirculation is switched off by the control unit.

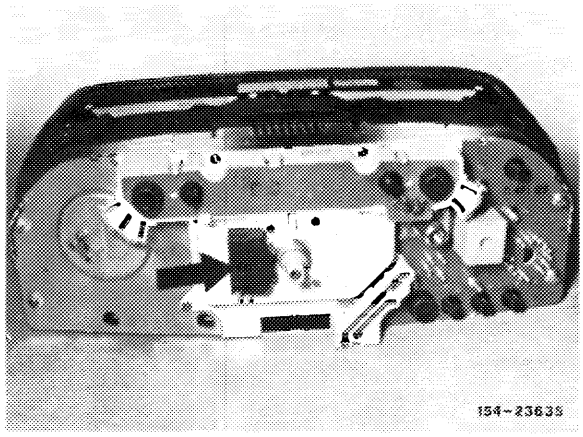

D. Overall function

Exhaust gas recirculation
Exhaust gas recirculation is effective if the following requirements have been met:

- **Engine speed**
  between 1200 ± 50/min and 2950 ± 50/min for model years 1986 through 1988.
  between 1000 ± 50/min and 2950 ± 50/min for model year 1989.

- **Coolant temperature** between 25 °C and 97 °C engine 602.

- **Speed** below 85 km/h approx. 56 mph, (M.Y. 1986-8), approx. 53 mph (M.Y. 1989) only manual 5-speed transmission.

- **Accelerator pedal not in full load position** as the EGR valve is closed via the microswitch just before full throttle position.

- **Vacuum control flap** between 1000 ± 50 min and 2500 ± 50 min closed.

The control unit EGR (N37 or N37 2) registers the following input signals

- Engine speed
- Speed (only manual 5-speed transmission)
- Temperature
- Load (accelerator pedal position)

It sends a voltage signal to the switchover valves (Y27) and (Y28). Supply vacuum is available on the vacuum control valve (65) and the vacuum amplifier (123). The vacuum control valve (65) passes a modulated vacuum on to the vacuum amplifier (123). The transducer regulates the vacuum from the vacuum control valve according to the load condition. This controlled vacuum is then used to activate the EGR valve and the vacuum control flap. The vacuum control flap is closed from 1000 ± 50 min to 2500 ± 50 min which increases the exhaust gas recirculating rate.

Note

The vacuum amplifier is not installed in vehicles with manual transmission. The exhaust gas recirculation valve and the vacuum control flap are activated directly by the vacuum control valve.

From model year 1990 mechanical pressure control flap (99) with pneumatic control unit, temperature dependent via thermovalve > 40 °C.

Block diagram exhaust gas recirculation